规格 SPECIFICATION

1.额定值 RATING: 10A 250VAC
2.绝缘电阻 INSULATION RESISTANCE: ≥100MΩ(DC500V/1MIN)
3.介电强度 DIELECTRIC STRENGTH: 2000V /0.5mA /1MIN
4.工作温度OPERATING TEMPERATURE: -25°C TO +85°C(MAX)
5.端子浸焊条件 DIP SOLDERING: 265°C, 3S

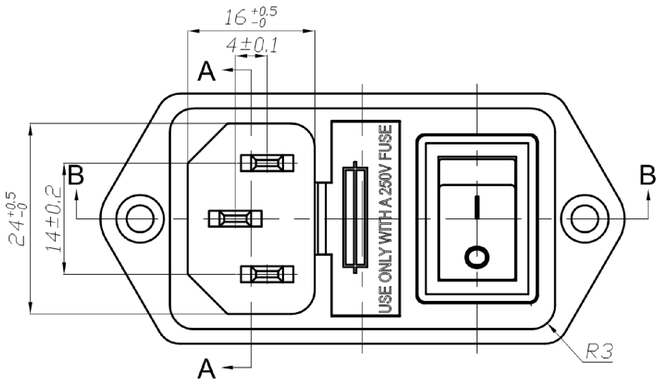

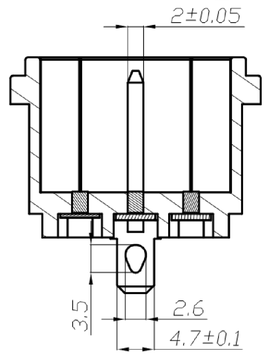

SECTION A~A

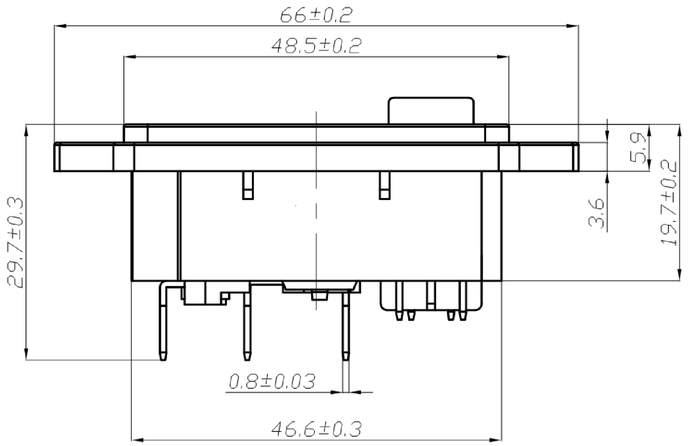

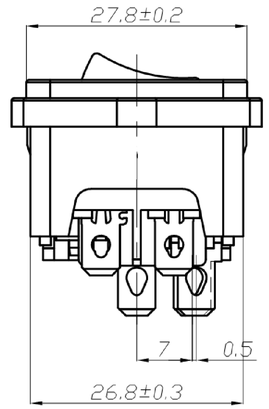

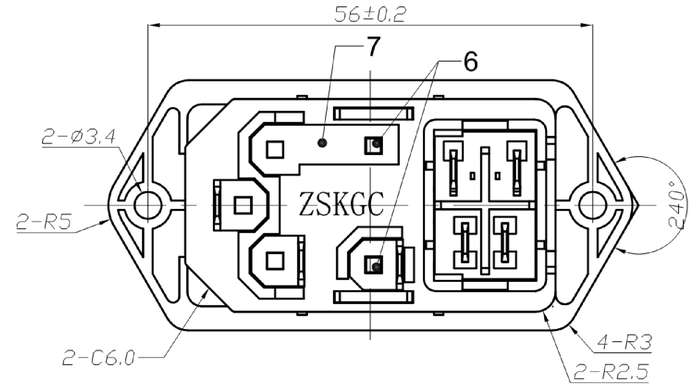

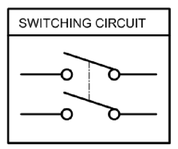

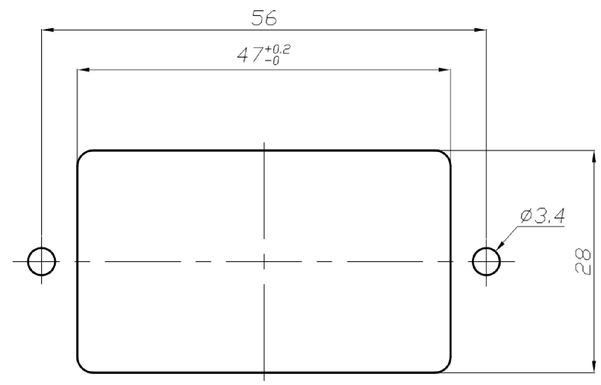

PANEL CUT-OUT

ITEM NO.	DESCRIPTION	DRAWN	DATE

東莞市高迪電子有限公司
DONG GUAN GAO DI ELECTRONICS CO., LTD

TOLERANCE UNLESS OTHERWISE STATED: Up to 5 ±0.2; Above 5 ~ 15 ±0.3; Above 15 ~ 30 ±0.4; Above 30 ~ 50 ±0.5; Angle ±0.3°

3RD. ANGEL'S | UNITS MM

DRAWN BY: Ming Ming Zou	DATE 10/31/13	MAT'L	
CHECKED BY: Ning Ning Su	DATE 10/31/13	FINISH	
APPROVED BY: Jia Xiang	DATE 10/31/13	SCALE	1 : 1
		SHEET NO.	1 of 1

TITLE	SWITCH+JACK		
MODLE	AC POWER SOCKET		
DWG NO.	GD-JR-101-1FR1	SIZE	A4
PART NO.		VER	R